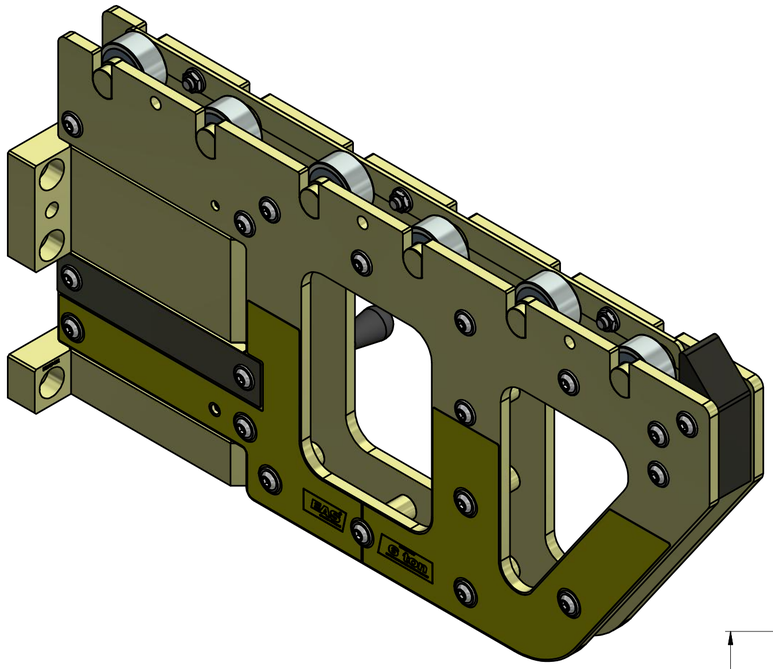

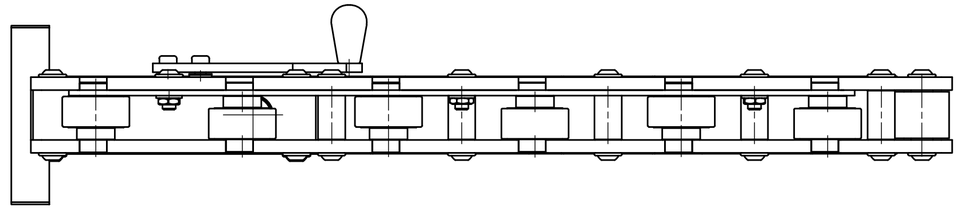

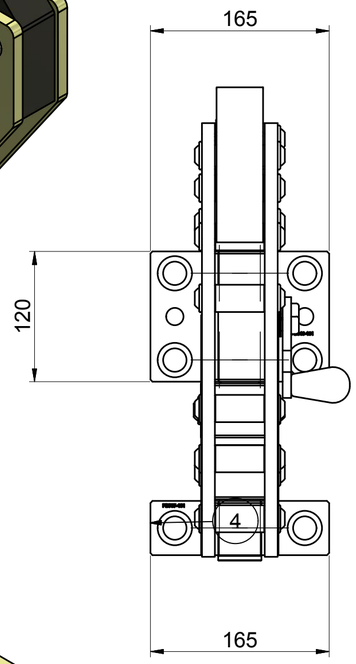

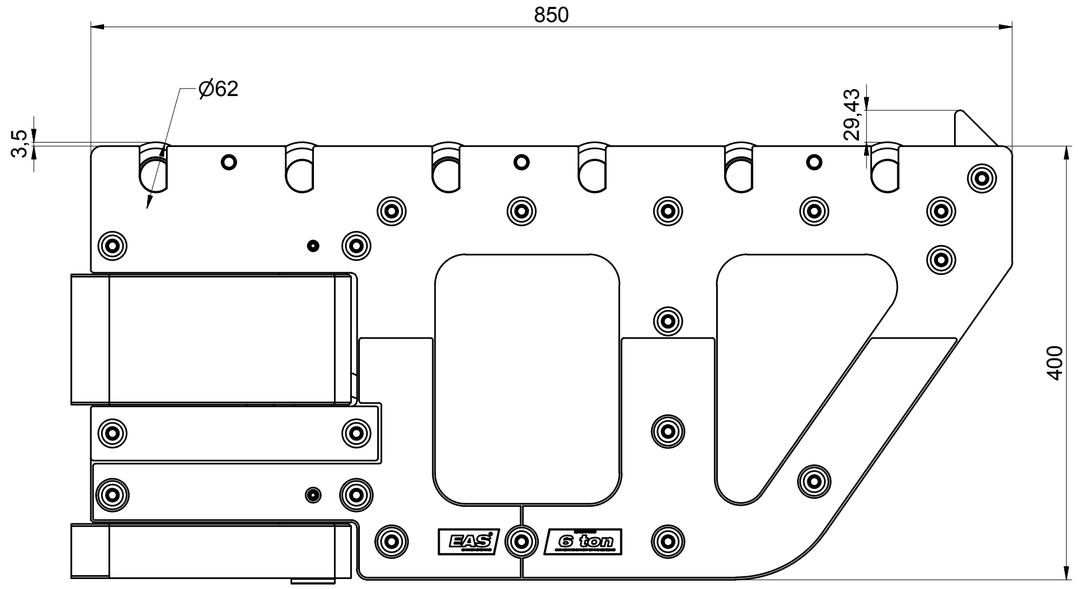

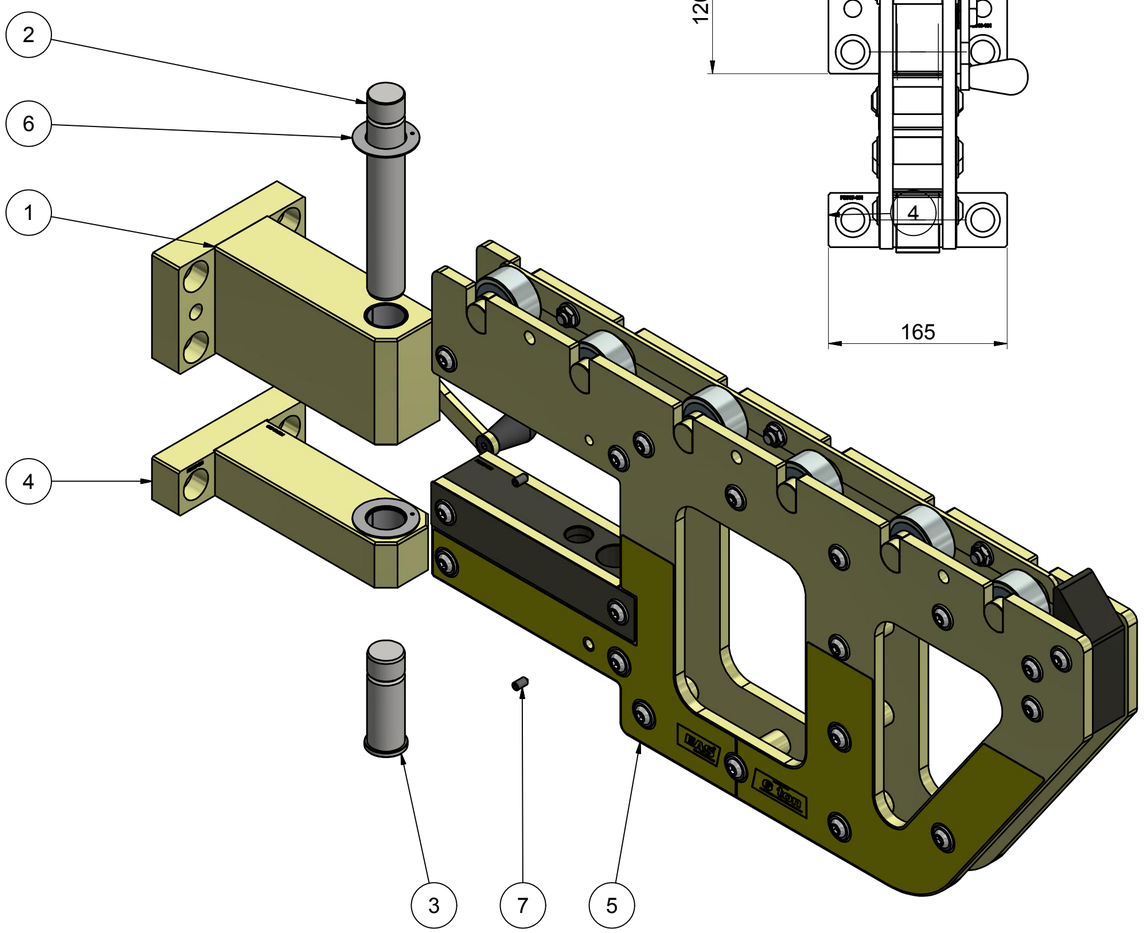

REVISION HISTORY EAS

REV	ECO	DESCRIPTION	DATE	APPROVED
-	E0105	RELEASED ACC. ECO	1-11-2017	welgravenj

Parts List

ITEM	QTY	PART NUMBER	DESCRIPTION
1	1	FB650-950	HINGE RIGHT ASSY TOP
2	1	FB705-104	SHAFT HINGE
3	1	FB709-104	SHAFT HINGE
4	1	FB712-950	HINGE RIGHT ASSY BOTTOM
5	1	FB746-950	CONSOLE RIGHT ASSY
6	2	PP0310-071	PLAIN BEARING
7	4	CCA819-0285C	SET SCREW M8x16

TOLERANCES ON DIMENSIONS UNLESS SPECIFIED ± MM[inch]

SIZE	0.5-6 [.02-.24]	6-30 [.24-1.18]	30-120 [1.18-4.72]	120-315 [4.72-12.40]	315-1000 [12.40-39.37]
TOL.	0.1 [.004]	0.2 [.008]	0.3 [.012]	0.5 [.02]	0.8 [.03]

TOL. ON ANGLES UNLESS SPEC. ± 1'

TOL. ON RADII UNLESS SPEC. ± MM[inch]

SIZE	0.5-3 [.02-.12]	3-6 [.12-.24]	6-30 [.24-1.18]
TOL.	0.2 [.008]	0.5 [.02]	1 [.04]

SPECIFICATIONS

WEIGHT: ± 87,856 kg

ALL ANGULAR DIMENSIONS ARE ± 1˚ UNLESS SPECIFIED

DIMENSIONS IN BRACKETS ARE IN [INCH]

NO CHANGE, NO PROGRESS

FINISH UNLESS SPECIFIED 3,2 Raµm [Raµ]

SCALE 1 : 4

EAS® CHANGE SYSTEMS

www.EASchangesystems.com

DESCRIPTION EPRS6-800 RIGHT ASSY

GROUP TECH. CODES	C.		DO NOT SCALE DRAWING	DR. yue	DATE 8-7-2016	DRAWING NO. FB744-950	Rev -	9/02
	M.			CH.	DATE			A2

THIS PRINT AND INFORMATION THEREIN IS CONFIDENTIAL AND PROPRIETARY AND IS THE PROPERTY OF EAS. IT IS NOT TO BE COPIED OR REPRODUCED WITHOUT WRITTEN PERMISSION OF EAS.